SECD2613-05 SYSTEM ANALYSIS AND DESIGN

PROJECT (PHASE 1)

BUS BOOKING SYSTEM

Lecturer's Name : Ms. Nor Anita Fairos bt. Ismail

Group : 2

Group Members :

NAME	NO. MATRIC
SANTTHYA A/P RAVICHANDRAN	A25CS0345
TAN JIA QI	A25CS0358
ANG HUI SHAN	A25CS0192
DANIA HAMIMI BINTI AZRIL DAHARI	A25CS0206
NUR HASINA ALEEYA BINTI MOHD HASRAM	A25CS0315
NUR FAIQAH HADIRAH BINTI JEFFRI	A25CS0309

TABLE OF CONTENTS

1.0 Introduction.....1
2.0 Background Study..... 2
3.0 Problem Statement.....3
4.0 Proposed Solutions.....5
4.1.1 Technical Feasibility..... 5
4.1.2 Operational Feasibility.....5
4.1.3 Economical Feasibility - CBA.....6
5.0 Objectives.....8
6.0 Scope of the Project..... 9
7.0 Project Planning.....10
7.1 Human Resource.....10
7.2 Work Breakdown Structure.....11
7.3 PERT Chart (based on WBS).....12
7.4 Gantt Chart (based on WBS)..... 13
8.0 Benefit and Overall Summary of Proposed System.....15
9.0 Appendix.....17

1.0 Introduction

The advancement of digital technology has significantly transformed the way services are delivered across various industries, including the transportation sector. In today's fast-paced environment, users expect convenience, efficiency, and accessibility when accessing services such as ticket booking. Traditional methods of purchasing bus tickets at physical counters are becoming increasingly outdated, as they often involve long waiting times, limited information, and inefficient processes.

This project proposes the development of an Online Bus Ticket Booking System, an application designed to modernize and streamline the ticket booking process. The system allows users to book bus tickets anytime and anywhere without the need to physically visit bus terminals. It also provides essential features such as viewing bus schedules, selecting seats, comparing prices, and choosing preferred payment methods.

By implementing this system, the overall efficiency of the booking process can be improved while enhancing user satisfaction. The proposed system not only benefits passengers by providing a convenient and user-friendly platform but also assists bus operators in managing bookings more effectively. Ultimately, this system aims to replace manual processes with a more reliable, accurate, and accessible digital solution.

2.0 Background Study

The current bus ticket booking system in many terminals still relies heavily on manual processes. Passengers are required to visit ticket counters physically to purchase tickets, which often leads to long queues, especially during peak travel periods such as weekends and holidays. This traditional method is time-consuming and inconvenient, particularly for individuals with tight schedules or limited mobility.

In addition, the manual system lacks transparency and accessibility of information. Passengers are unable to check real-time seat availability, compare ticket prices, or view detailed travel schedules before making a purchase. This limitation can lead to poor decision-making and dissatisfaction among passengers, especially those with specific preferences such as seat selection or travel timing.

From the operational perspective, manual booking systems increase the workload of staff and are prone to human errors. Mistakes in recording passenger details, selecting seats, or issuing tickets can negatively impact both customers and bus operators. Furthermore, the lack of integrated payment options restricts users to limited methods, reducing overall convenience.

With the rapid growth of digital platforms and e-commerce systems, there is a strong need to transition from manual to automated solutions. An online bus ticket booking system addresses these issues by providing a centralized platform where users can easily access information, make bookings, and complete payments securely. Such systems have already proven successful in other transportation sectors, highlighting the importance of adopting similar technology in bus services.

Therefore, this project is developed to bridge the gap between traditional booking methods and modern user expectations by introducing a more efficient, reliable, and user-centered system.

3.0 Problem Statement

The current bus booking process is done entirely through manual methods, with no dedicated digital system available. This results in several challenges, including:

1. <u>Long Queues and Waiting Time</u>

Passengers need to physically purchase tickets at the bus terminal counter. This may cause time loss, especially during peak hours, and passengers may face the risk of not getting their preferred departure time. Passengers may become tired and frustrated when this situation occurs.

2. <u>Inefficient Booking Process</u>

The ticket booking process is handled manually by staff, which slows down the purchasing process. This may cause the bus terminal to incur higher costs as more staff are required to manage bookings.

3. <u>Lack of Departure Information</u>

Passengers are unable to check seat availability, which may lead to issues such as no available seats and delays in decision-making. This also affects passengers with specific needs, such as those who prefer front seats to avoid motion sickness. In addition, solo female travelers may prefer single seats, and the lack of information may cause discomfort.

4. <u>High Risk of Human Errors</u>

The manual booking process for recording passenger details and seat selection may lead to errors, such as incorrect passenger information, wrong departure times, or incorrect destinations.

5. <u>Lack of Ticket Options and Higher Prices</u>

Passengers are unable to compare ticket prices across different bus terminals. Each terminal offers different departure times, seat availability, and prices. As a result, passengers may unknowingly purchase tickets at higher prices.

6. Limited Payment Methods

The current system does not support multiple payment options, making it less convenient for passengers who prefer digital payments.

4.0 Proposed Solutions

The current system booking ticket requires an alternate solution to solve the problem facing while making purchases with the current ticket system. The proposed solution is an application called EasyBus.A feasibility study was conducted to evaluate the practicality and desirability of passenger search using the application to search for available bus route,view schedule, compare ticket price,select seats and make an online payments.Management systems and its feasibility analysis were categorized as below criteria.

4.1 Feasibility Study

4.1.1 Technical Feasibility

The technical feasibility of the application of online booking system was studied that it can be developed using existing and well established technologies to be designed as an application that operates on standard hardware.Commonly used programming language and database management system can be utilized to develop the system, making implementation practical and achievable.

4.1.2 Operational Feasibility

The operational feasibility of the proposed system is studied as user-friendly designed and easy to operate for all the stakeholders.Passenger can easily using the application by following simple steps such as searching for bus,selecting the seat and making payment which require minimal learning and skills.The user will be easily adapted to the use of online booking system due to its minimal steps of purchasing ticket.

4.1.3 Economical Feasibility - CBA

The proposed online bus ticket booking system is economically feasible as the expected benefits outweigh the associated costs.There're some initial costs involved in developing and deploying the system, however the long-term financial and operational benefits justify the investment.

Estimate Cost	
Item	**Cost**
Software developement	RM 28000
Infrastructure setup	RM 8000
System maintenance	RM 2500/year
Cloud hosting fees	RM 4800/year
Testing and deployment	RM 3500/year
Technical support	RM 3000/year
Estimate Benefits	
Item	**Benefit**
Reduced ticket counter staff	RM 9500/year
Increase ticket sales	RM 8000
Reduced manual booking errors	RM 2500/year
Assumptions	
Discount rate	10%
Sensitivity rate (cost)	1.1
Sensitivity rate (benefits)	0.9
Annual change in production	7%
Annual growth in benefits	5%

COST	YEAR 0	YEAR 1	YEAR 2	YEAR 3
DEVELOPEMENT COST				
SOFTWARE DEVELOPEMENT	30800	-	-	-
INFRASTRUCTURE SETUP	8800	-	-	-
TOTAL COST	39600			

PRODUCTION COST				
SYSTEM MAINTENANCE	-	2750	2942	3147
CLOUD HOSTING FEES	-	5280	5649	6044
TESTING AND DEPLOYMENT	-	38500	4119	4407
TECHNICAL SUPPORT	-	3300	3531	3778
ANNUAL PRODUCTION COST	-	49830	16241	17376
PRESEENT VALUE	-	46570	14185	14183
ACCUMULATED COSTS	-	86170	100355	114538

BENEFITS				
REDUCED STAFF COSTS	-	8550	8977	9425
INCREASED TICKET SALES	-	7200	7560	7938
REDUCED BOOKING ERROR	-	2250	2362	2480
TOTAL BENEFITS	-	18000	18899	19843
PRESENT VALUE	-	17142	17142	17142
ACCUMULATED BENEFITS	-	17142	34284	51426
GAIN OR LOSS		69028	66071	63112
PROFITABILITY INDEX		1.298		

The estimated cost and benefits meet a good investment from the system.According to CBA table, the total cost of the system including initial investment is RM 39600.Total benefits gained is RM 51426.The profitability index is 1.298 shows that for every RM 1 invested the system return about RM 1.30, demonstrating a positive return on investment.

5.0 Objectives

The objectives of the creation of online bus ticket booking system is to reduce the inefficiency of physical bus ticket booking systems.Therefore,the following are the objectives of the proposed system:

a. To allow users to secure their bus ticket without having to queue at the counter.
b. To provide users a platform to view the bus schedule of their desired destination.
c. To allow users to choose their desired pick-up and boarding location.
d. To make it easier for buyers to buy bus tickets anytime and everywhere.
e. To let users choose their own desired bus amenities.
f. To provide users with a bus ticket with a reasonable price with discount vouchers.
g. To provide different payment methods such as online banking, e-wallet, etc.

6.0 Scope of the Project

The bus booking system will be a mobile application that can operate on both Android and iOS platforms. Users of the application must create an account with an email and password to ensure the security and privacy of the users. Users should also be able to perform money transactions in the application to make payments for bus tickets. This should cover online bank transfers, e-wallet transfers and debit and credit card payments. Refunds should also be possible within a certain timeframe from the purchase date and the date of boarding.

The system should allow users to see the availability of buses depending on their chosen boarding location and desired destination. This includes the date, time of boarding and arrival, the seats available, and the price of the ticket. Users will receive a digital copy of their receipt and ticket which they can print out if they choose to do so. The system should also allow the user to be verified as a student to see if they are eligible for student discounts. Nevertheless, this system is available for all users.

This system will not be available as an online website portal for desktop platforms such as Windows. Physical cash payments will also not be managed by the system to ensure a cashless payment system.

7.0 Project Planning

7.1 Human Resource

1. **Project manager**
   Oversees the entire project process by planning, organizing, and managing activities. Monitors the deadline and program process. Managing reports and documentation of each phase of the project. Coordinates communication with team members.
2. **System analyst**
   Act as a consultant, expert supporting and agent of change. Studies data flow and business processes. Translate the business requirements to IT projects. Work on system design and feasibility study.
3. **IS manager**
   Responsible for installation of the organization's IT infrastructure and systems. Ensures that the system aligns with business goals and supervises technical teams. Maintains the system performance and security..
4. **Programmer**
   Works with several programming languages. Handle the backend and fronted coding. Debug programs and fixed the bugs. Using CASE tools to automate the program's errors. Maintenance and update of the system.
5. **Internal audit**
   Acts as an advisor on internal control in both manual and automated system design. Ensures the system operates securely and efficiently. Define the management of risks. Manage long-range planning.
6. **UI/UX designer**
   Focuses on design of the wireframe, user interface and user experience. Focuses on visual design to ensure the system is user-friendly and attractive.

7.2 Work Breakdown Structure

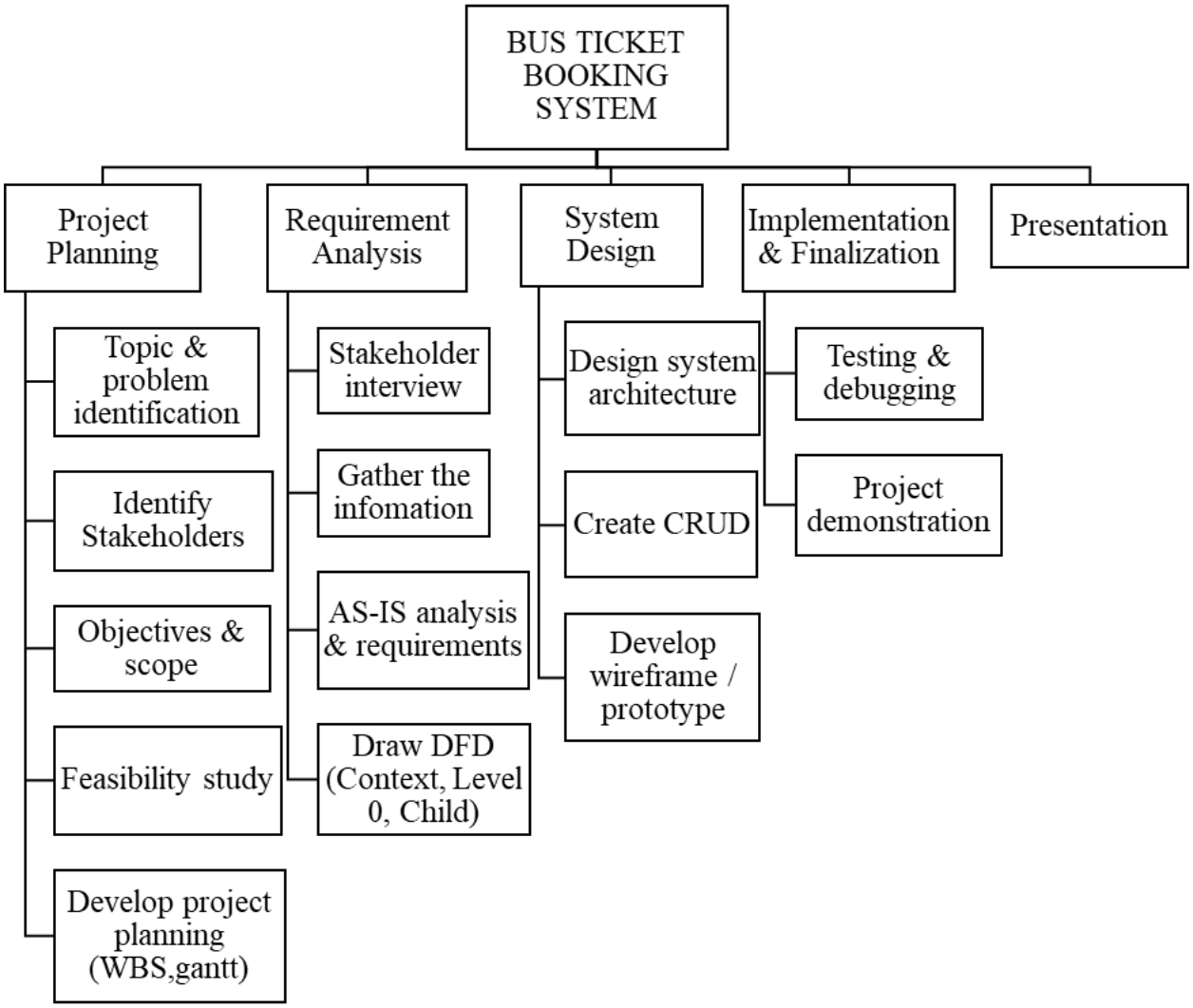

7.3 PERT Chart (based on WBS)

Activities No	Activities	Predecessor	Duration
A.	Topic & problem identification	None	1
B.	Identify Stakeholders	A	1
C.	Objectives & scope	A	3
D.	Feasibility study	A	6
E.	Develop project planning (WBS,gantt)	B, C, D	7
F.	Stakeholder interview	E	4
G.	Gather the information	F	2
H.	AS-IS analysis & requirements	G	8
I.	Draw DFD (Context, Level 0, Child)	H	9
J.	Design system architecture	I	8
K.	Create CRUD	J	6
L.	Develop wireframe / prototype	K	10
M.	Testing & debugging	L	3
N.	Project demonstration	M	2
O.	Project presentation	N	1

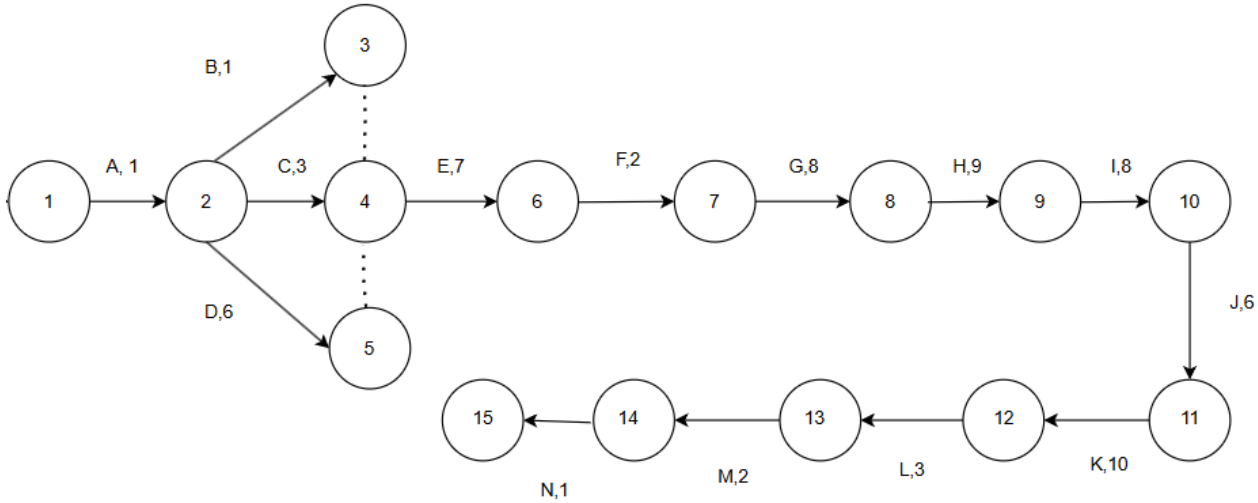

7.4 Gantt Chart (based on WBS)

GANTT CHART

(BUS TICKET BOOKING SYSTEM)

WBS NUMBER	ACTIVITY	DURATION
1	**Project Planning**	
1.1	Topic & problem identification	1
1.2	Identify Stakeholders	1
1.3	Objectives & scope	3
1.4	Feasibility study	6
1.5	Develop project planning (WBS,gantt)	7
2	**Requirement Analysis**	
2.1	Stakeholder interview	4
2.2	Gather the infomation	2
2.3	AS-IS analysis & requirements	8
2.4	Draw DFD (Context, Level 0, Child)	9
3	**System Design**	
3.1	Design system architecture	8
3.2	Create CRUD	6
3.3	Develop wireframe / prototype	10
4	**Implementation & Finalization**	
4.1	Testing & debugging	3
4.2	Project demonstration	2
5	**Presentation**	
5.1	Project presentation	1

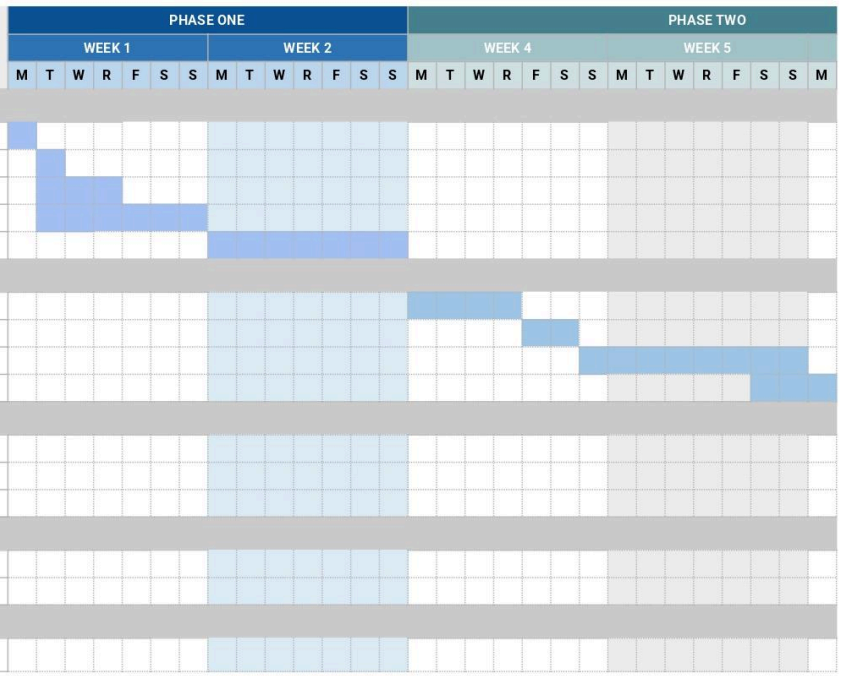

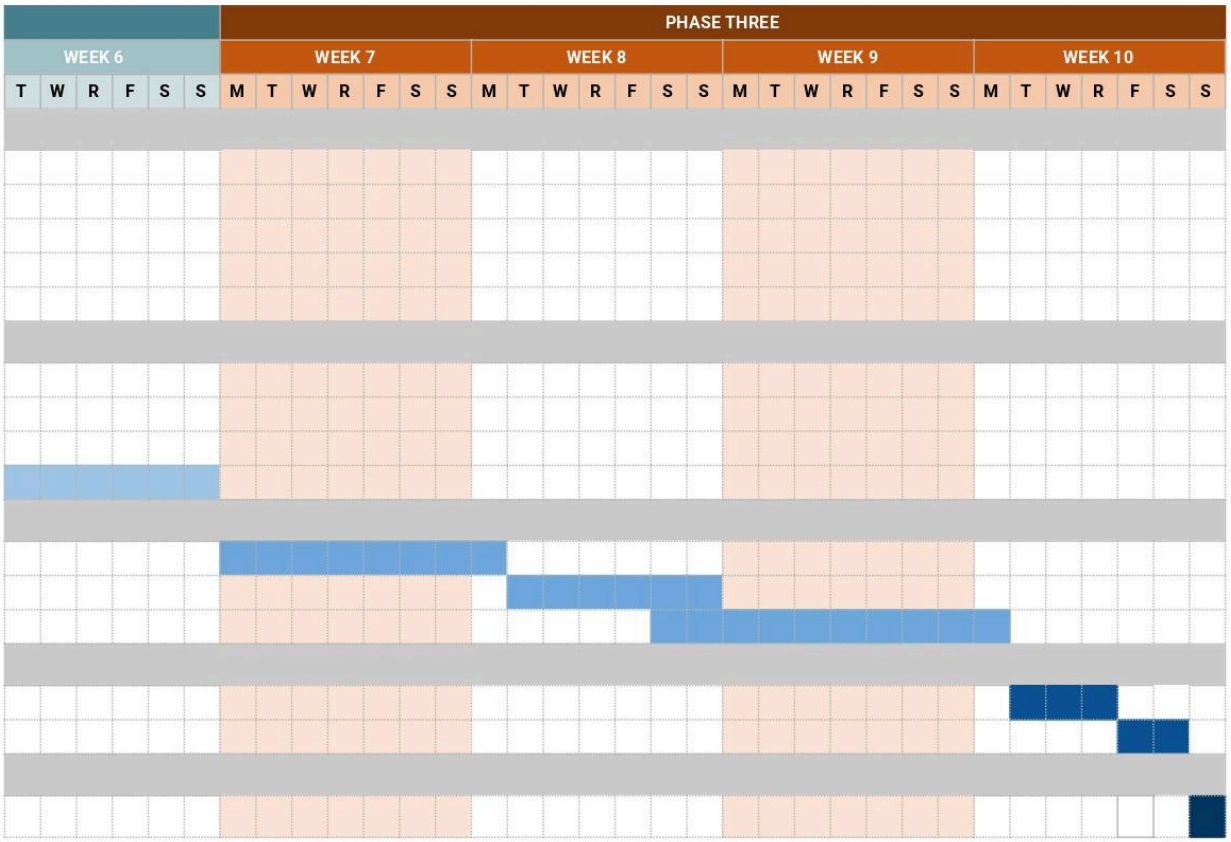
PHASE THREE
WEEK 6
WEEK 7
WEEK 8
WEEK 9
WEEK 10
T W R F S S M T W R F S S M T W R F S S M T W R F S S M T W R F S S

8.0 Benefit and Overall Summary of Proposed System

The proposed Bus Booking System will enhance the experience of buying bus tickets for both customers and bus operators. This system provides significant benefits in various aspects:

1. Timesaving. Users do not need to travel to bus ticket sales counters or wait in long queues. The system will speed up the booking process and especially be convenient for students, senior citizens, and hardworking populations. Besides, staff can be reassigned to a more productive workplace instead of ticket sales.

2. Users can save on the cost of fuel and easily check updates for available discounts or promotions.

3. The system can reduce operation costs, while system automation reduces the need for physical ticket counters and human resources. The decreasing of the requirement for physical receipts will be saving printing expenses.

4. The system provides a structured layout to make it easy for users to understand and complete the booking process.

5. The information is already required in the system, such as department time, time of arrival, locations, prices, and other things, helping them with accurate travel planning. With complete information regarding it, users can compare the options and choose the best travel plan.

6. Users can change their travel time during emergencies. Users also can request refunds if they cannot continue with the previous travel plan. To provide flexible travel planning.

7. A modern booking system can enhance the bus company's reputation and attract more customers. A more convenient system encourages more bookings, thereby increasing sales.

8. A modern booking system is easier to maintain compared to a conventional booking system. Customer feedback can easily be gathered to improve the system and service quality.

In conclusion, the Bus Booking System demonstrably improves both passenger satisfaction and operational effectiveness. This system furnishes a swift, economical, and intuitive ticketing

solution. Consequently, it facilitates more informed decision-making processes and fosters a more contemporary and efficient public transportation service. By integrating digital technology into the ticketing process, the system also encounters the problems of conventional booking methods and supports the transition toward a more digital system.

9.0 Appendix

GitHub Repository Link:
https://github.com/nurhasinaaleeya/Group2_Project1_SAD_20252026

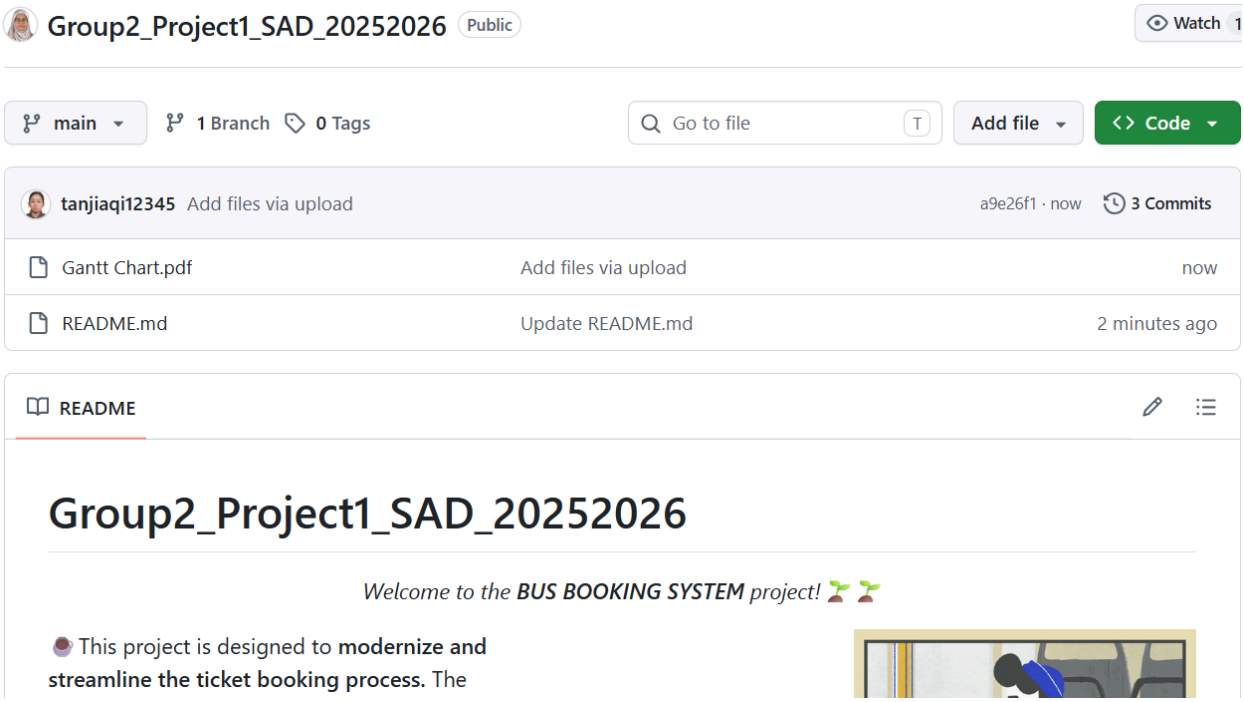

Kanban Board Link:
https://github.com/users/nurhasinaaleeya/projects/1/views/1